Halsey Taylor® Owners Manual

HOF14 Series Free-Standing Water Coolers

Note: Danger! Electric shock hazard. Disconnect power before servicing unit.

USES HFC-134A REFRIGERANT

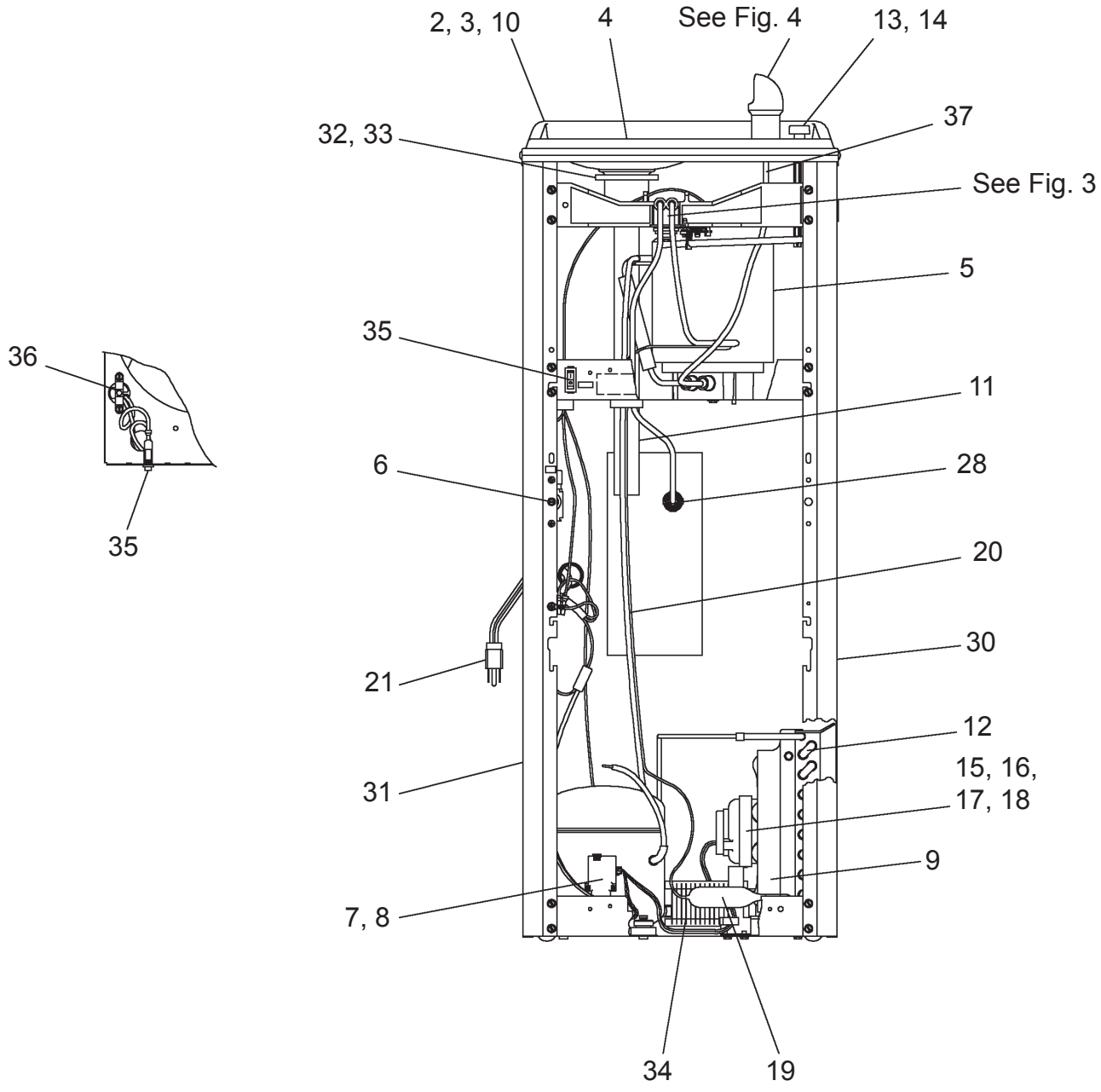

FIG. 1

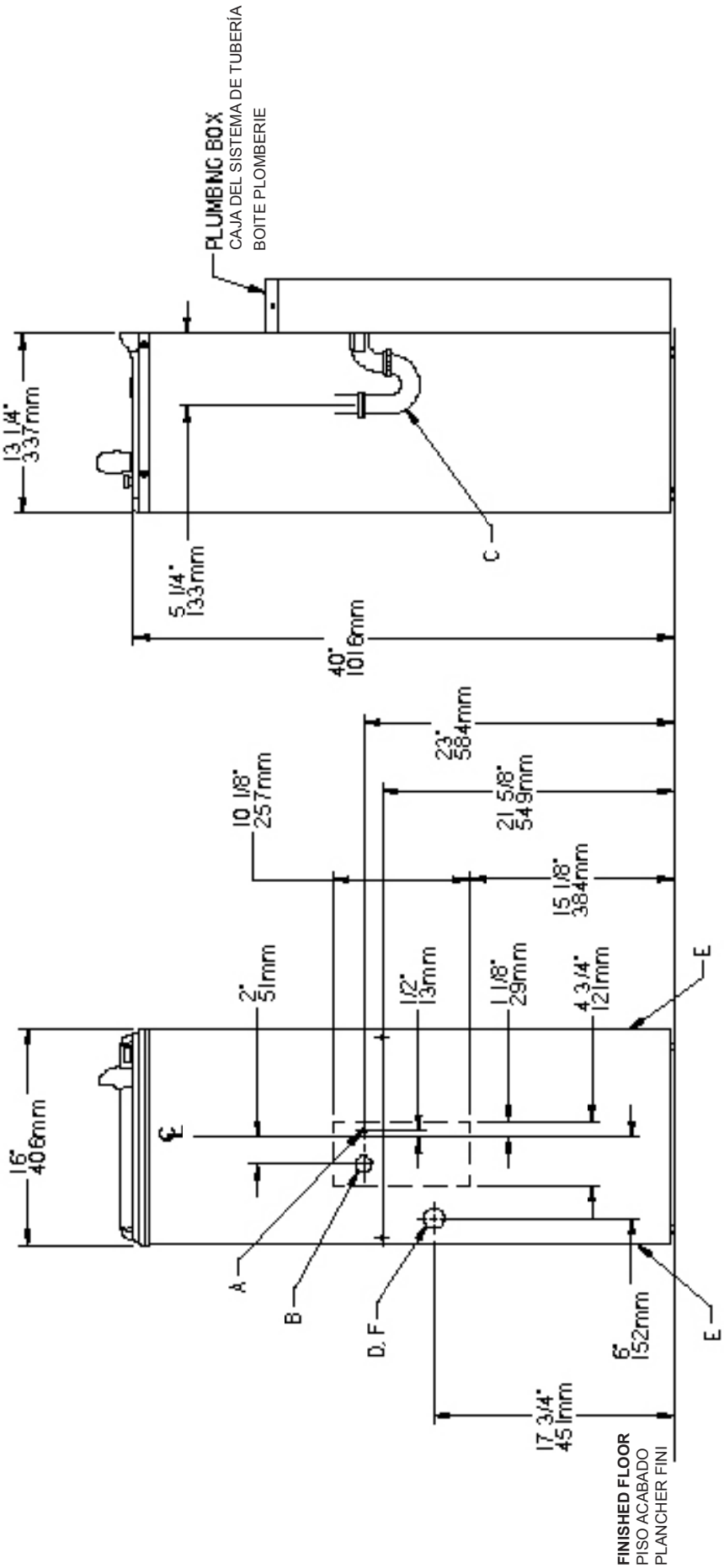

FIG. 2

LEGEND/LEYENDA/LÉGENDE

A = RECOMMENDED WATER SUPPLY LOCATION 3/8 O.D. UNPLATED COPPER TUBE CONNECT STUB 1-1/2 IN. (38 mm) OUT FROM WALL SHUT OFF BY OTHERS
SE RECOMIENDA UBICAR EL TUBO CORTO DE CONEXIÓN AL TUBO DE COBRE SIN CHAPAR DE 3/8" DE DIÁM. A FUERA DE LA LLAVE DE PASO EN LA PARED COLOCADA POR TERCEROS.
EMPLACEMENT RECOMMANDÉ D'ALIMENTATION EN EAU PAR TUBE EN CUIVRE NON PLAQUÉ DE 3/8 PO. (9,5 mm) D.E. CONNECTANT UNE TUYAUTERIE DEPUIS LE ROBINET D'ARRÊT FOURNI PAR D'AUTRES.

B = RECOMMENDED LOCATION FOR WASTE OUTLET 1-1/4" O.D. DRAIN
UBICACIÓN RECOMENDADA PARA EL DRENAJE DE SALIDA DE AGUA, DE 1¼" DE DIÁMETRO.
EMPLACEMENT RECOMMANDÉ POUR LE DRAIN DE D.E. 1-1/4" DE SORTIE D'EAU.

C = 1-1/4 TRAP NOT FURNISHED
PURGADOR DE 1¼ NO PROPORCIONADO
SIPHON 1-1/4 NON FOURNI

D = ELECTRICAL OUTLET LOCATION WITH GROUND FAULT CIRCUIT INTERRUPTER (GFCI)
UBICACIÓN DE LA TOMA DE ELECTRICIDAD
EMPLACEMENT DE LA PRISE DE COURANT

E = INSURE PROPER VENTILATION BY MAINTAINING 4" (102mm) (MIN.) CLEARANCE FROM CABINET LOUVERS TO WALL.
ASEGURE UNA VENTILACIÓN ADECUADA MANTENIENDO UN ESPACIO E 4" (102mm) (MÍN.) DE HOLGURA ENTRE LA REJILLA DE VENTILACIÓN DEL MUEBLE Y LA PARED
ASSUREZ-VOUS UNE BONNE VENTILATION EN GARDANT 4" (102mm) (MIN.) ENTRE LES ÉVENTS DE L'ENCEINTE ET LE MUR.

F = POWER CORD 4' (1219mm) LONG
CABLE ELÉCTRICO DE 4' (1219mm) PIE, DE LARGO
CORDON D'ALIMENTATION 4' (1219mm)

PUSH BUTTON VALVE ADJUSTMENT

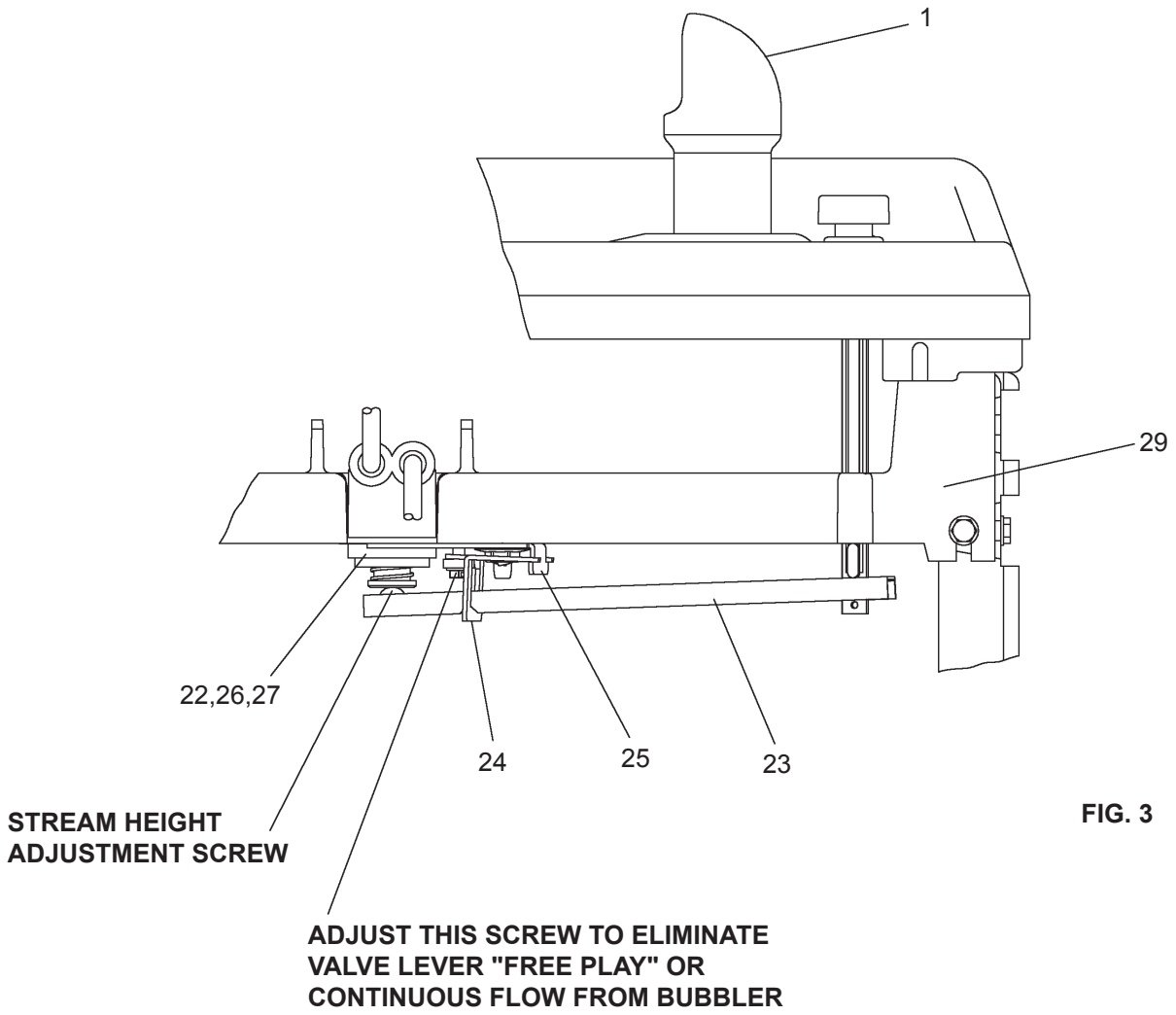

FIG. 3

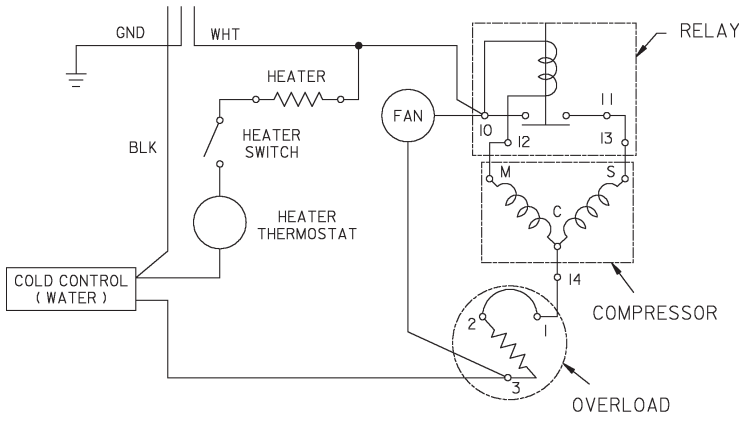

Wiring Diagram

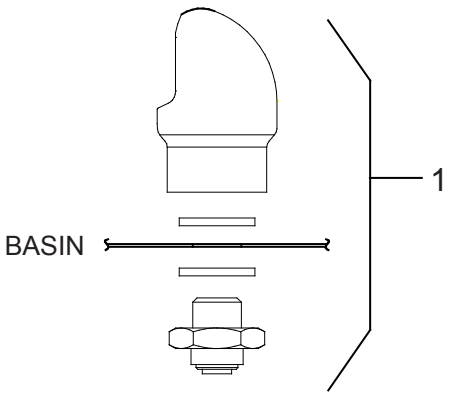

FIG. 4

115V ITEMIZED PARTS LIST

ITEM NO.	PART NO.	DESCRIPTION
1	98446C	Kit-VR Bubbler
2	600985451640	Drain Plug
3	160270508640	Strainer Plate
4	28346C	Basin
5	98771C	Kit - Evaporator Assembly
6	98773C	Kit - Cold Control/Screws
*7	36312C	Compressor Serv. Pak
8	98755C	Kit - Relay/Overload/Capacitor/Brkt/Clip
9	101452831560	Fan - Shroud
10	110868642550	Screw - #10-24
11	45897C	Tailpipe Assy
12	66252C	Condenser
13	101453431640	Cap Push Button
14	101507531550	Push Button Stem
15	31491C	Fan Motor
16	30664C	Fan Blade
17	70018C	Fan Blade Nut
18	402672043730	Fan Motor Bracket
19	66203C	Drier
20	98846C	Kit - Heat Exchanger/Drier
21	35901C	Power Cord
22	15005C	Regulator Retaining Nut
23	26860C	Regulator Lever
24	26861C	Pivot Bracket
25	26862C	Regulator Retaining Bracket
26	50986C	Regulator Holder
27	61314C	Regulator
28	55996C	Strainer
29	55880C	Regulator Mounting Bracket
30	401536242830	Side Panel - Right
31	401536342830	Side Panel - Left
32	75588C	Nut - Slip Nut 1-1/4
33	55913C	Adaptor - Drain
34	35906C	Heater Strip
35	35907C	Switch-Heater
36	35910C	Heater Thermostat Assy
37	56092C	Poly Tubing (Cut To Length)
NS	401507442830	Front Panel
NS	75583C	Elbow - 5/16" x 1/4"
NS	27113C	Plumbing Box
NS	27112C	Plumbing Box Cover

220V/240V ITEMIZED PARTS LIST

ITEM NO.	PART NO.	DESCRIPTION
*7	35951C	Compressor Serv. Pak
8	98757C	Kit - Relay/Overload/Capacitor/Brkt/Clip
15	31431C	Fan Motor
34	35916C	Heater Strip

***INCLUDES RELAY & OVERLOAD. IF UNDER WARRANTY, REPLACE WITH SAME COMPRESSOR USED IN ORIGINAL ASSEMBLY.**

NOTE: All correspondence pertaining to any of the above water coolers or orders for repair parts MUST include Model No. and Serial No. of cooler, name and part number of replacement part.

WARNING!

This unit is frost resistant down to 0˚F with no wind. Prevailing winds can reduce the ability of the heater element to prevent light freezing. If the ambient air temperature will drop below 0˚F, the cooler needs to be drained of all water by blowing out all water lines, evaporator (item 5), and the drain trap. A heater strip is used to heat the unit and will begin to cycle at 40˚ +/- 5˚ F. A check at this temperature will ensure the heater is working and the unit is resistant to light freezing.

ALSO, MAKE SURE THERE ARE NO PLASTIC OR FLAMMABLE COMPONENTS DIRECTLY ABOVE THE HEATER STRIP.

Halsey Taylor®
2222 CAMDEN COURT
OAK BROOK, IL 60523
630.574.3500

PRINTED IN U.S.A.

FOR PARTS, CONTACT YOUR LOCAL DISTRIBUTOR OR VISIT OUR WEBSITE WWW.HALSEYTAYLOR.COM